THENOW

Shanghai Thenow Purification Technology Co.Ltd

Wine Cellar Cooling Units

Self-contained

User Manual



Thank you for purchasing this “Thenow”product;
Please read this manual carefully before attempting to install, operate or service;
Please retain this booklet for future reference.

!!! WARNING !!!



To avoid the risk of electrical shock, property damage, personal injure or death, please read the following instructions carefully with safety or warning labels.

*During transportation or moving, please follow the correct direction on the packing case.

* After transportation or moved, it needs to be allowed to stand for more than 24 hours before it can be turned on.

*Do not attempt to carry out any measurement, device replacement or other maintenance work not covered in this manual, otherwise it may lead to warranty failure, endanger normal operation, extend equipment downtime and increase additional maintenance costs.



Disconnect electric power from the appliance before performing any maintenance or repairs, failure to do so could result in death or electrical shock.

!!! WARNING !!!



1. Thenow self-contained wine cellar cooling units use eco-friendly, colorless, and odorless R290 refrigerant, which is flammable.

The R290 refrigerant is environmentally friendly, but flammable. It does not damage the ozone layer, nor does it increase the greenhouse effect. Care must be taken during transportation and setting up of the appliance that no parts of the cooling system are damaged. Leaking coolant can ignite and may damage the eyes.

2. The unit should be stored in an area free from continuous sources of ignition.

The unit should be kept away from areas with open flames, lit gas appliances, or operational electric heaters to minimize fire hazards associated with the flammable refrigerant.

3. Emergency procedures in case of refrigerant leakage.

In the event of refrigerant leakage, immediately open all doors and windows to ensure proper ventilation, cut off the power supply, evacuate the area, and contact a professional for repair.

4. Safety inspection prior to maintenance.

Before performing any maintenance or repairs on a wine cellar air conditioner that uses a flammable refrigerant, a thorough safety inspection must be conducted to ensure that the risk of fire is minimized.

Table of Contents

1. Product Introduction.....1

2. Dimensions & Technical Data.....2

3. Installation & Debugging.....4

4. Introduction of Controller.....12

5. Maintenance.....15

6. Troubleshooting.....17

7. Warranty.....19

Product Introduction

Wine Cellar Cooling Units Through-the-Wall

Thenow through-the-wall wine cellar cooling unit is specially designed to match the demands in foreign markets. It is a ductless wine cellar cooling units with evaporator and condenser are housed together in one unit. It offers a compact design that can be applied to the unique today's do-it-yourself modern wine cellar or wine wall.

Features:

Compact design, flexible installation;

Quiet and efficient operation;

Build-in wet film pad and PTC heater, better control the temperature and humidity;

Intelligent control panel, famous brand sensors with stable quality, integrated ModBus connection;

Famous brand compressor, safe, stable and low energy consumption;

Traditional Chinese knot design air grille, better heat dissipation.

Working Principle

1.Refrigeration

Using cycling vapor compression refrigeration system,when the compressor work, indraft low temperature and pressure refrigerant gas from evaporator, compressed by compressor into high temperature and pressure gas, and then into the condenser to condense into liquid, meantime release heat, after throttling under the function of the thermal expansion valve, entering into the evaporator and absorbed heat,then evaporate into gas, finally back to the compressor through the suction tube and complete a refrigeration cycle ; On the other hand,through changing of refrigerant flow direction, total or partial condensing heat generated from refrigeration can be exhausted to outside,to achieve the purpose of adjusting the indoor temperature.

2. Dehumidification Principle

When the wet air flows through the evaporator surface, the air temperature will drop, when it falls below the dew point,the steam in the air will condense out, gathering and drainage of water pipes in the receiving plate, the controller automatically adjusts the compressor start-up time according to the setting humidity , so as to achieve the purpose of adjusting humidity.

3. Heating

Electric heating compensation.

4.Humidification

Adopt circulating water wet-film auto control humidification system, wet film is made of Swedish organic polymer material with sterilization and disinfection function

Dimensions & Technical Data

Dimensions HSN-JT20:

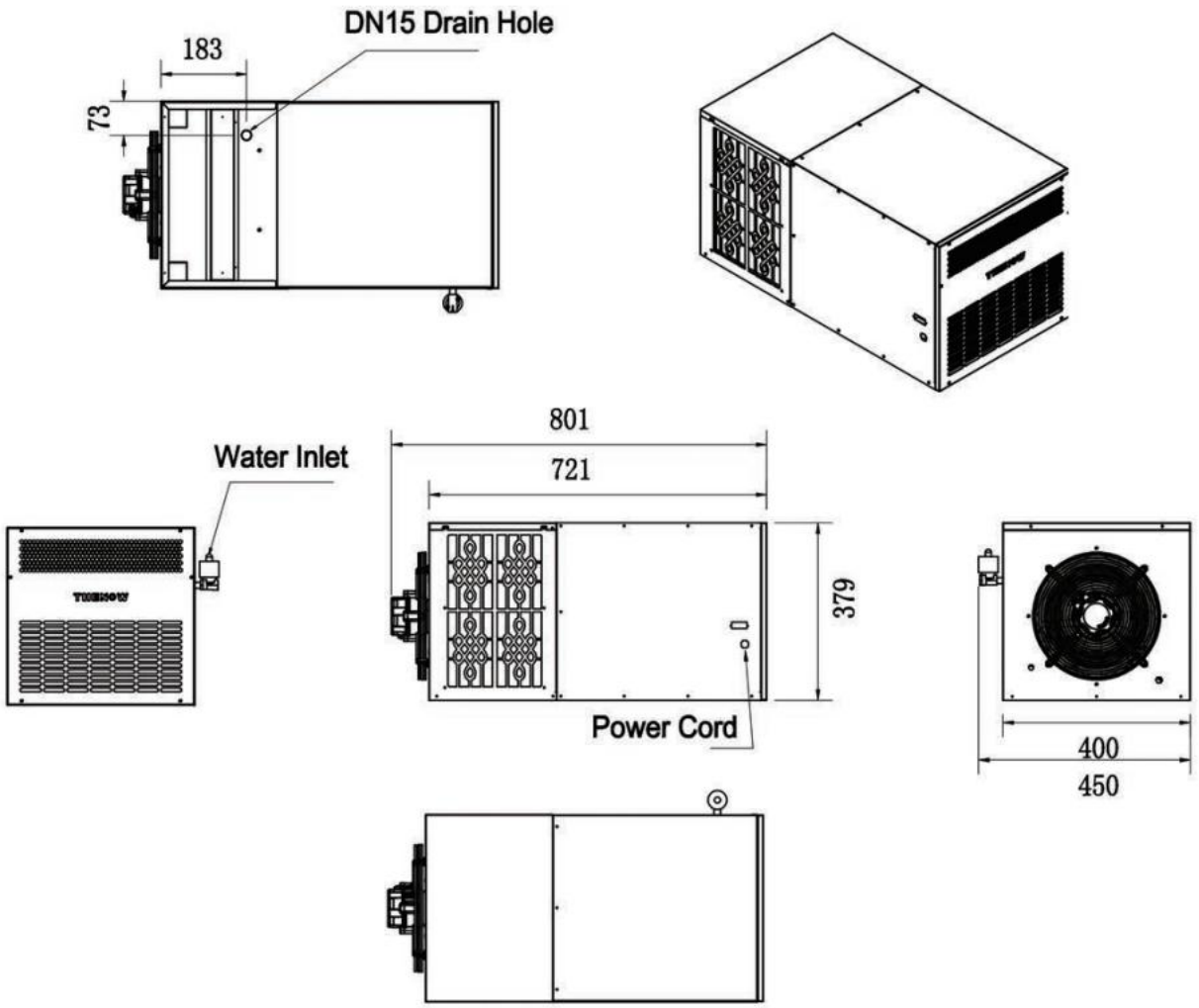

Technical Data

Model		Unit	JT20
Cellar Size	Semi Buried	m^3	4～7
	Insulated*	m^3	4～12
Power		V/HZ	220V/50Hz
Cooling		KW	0.72
Heating		KW	1
Air Flow		m^3/h	170
Static Pressure		Pa	30
Noise		dB(A)	42
Refrigerant		/	R290
Control		/	PC Full-touch smart control
Temperature		℃	10-18℃, ±2℃
Humidity		℃	50~70%, ±5%
Total Power		KW	1.5
Humidifier		/	Wet-film
Humidity Capacity		Kg/h	1
Dimension (L*W*H)		mm	881*450*379
Drainage		mm	ф20

Note: Cellar inside dry-bulb t=12℃ 60% Outside dry-bulb t=35℃， wet-bulb t=28℃

Insulated*: Cellar walls and ceiling insulation with 60mm polyurethane.

Cellar size in above sheet is just experience value. There are several factors such as glass, stone, concrete, insulation, ambient temperature, ventilation etc. which will change the required amount of Kw needed to properly cool your wine room or wine cabinet. We strongly recommend you contact with us or our distributors beforehand to help you to choose the model matched. We do not bear the losses caused by the selection errors caused by the above reasons.

Installation and Debugging

IMPORTANT NOTES FOR INSTALLATION

When building a wine cellar, it is essential to insulate it. Traditional building materials such as brick, concrete and glass are NOT good insulators. Failure to insulate your custom wine cellar will essentially put additional load on the conditioning system & void manufactures warranty. Cellar space MUST be insulated with Kingspan K17/K18 (or equivalent insulation panels).

Any glass doors/windows/panels must be double glazed argon gas filled min 6mm/12mm/6mm.

Calculated M3 measurement of the cellar MUST be less than the highest capacity the unit is engineered to service.

Identify gas pipe run in the user manual to ensure horizontal & vertical measurement meets recommendations

No other equipment that can expel heat, such as fridges, should be housed in the cellar space as it will compromise temperature & humidity control.

All trades involved with installation must be registered:

- HVAC technician
- Plumber
- Electrician

The units are to be installed as recommended allowing ease of access for any future maintenance for both indoor and outdoor units.

Pre-installation Inspection

Use caution when lifting and check package for damage

A. Check the outer packing for breakage.

B. Machine model (nameplate), check whether it is consistent with what you ordered.

C. The appearance of the whole machine is intact.

D. A shipment may include one or more boxes containing accessories, please check all shipped boxes for the following contents.

Note: Each model of the Thenow self-contained cooling units contain one wooden box. For details, please refer to the label affixed to the box.

Indoor unit case includes:

-- 1 Fan-coil unit
-- 1 install flange
-- 1 Control panel
-- 1 Mounting kit

Remove the unit from box. Check for any signs of concealed damage, and that all mentioned items above have been provided. Contact Thenow or its authorized distributor immediately if components are missing or damaged during transportation.

Sit unit upright for at least 24 hours before installation.

If the unit arrived without gas, during the transportation of air conditioners, nitrogen has been used for pressure preservation, the steps for adding refrigerant before use typically include the following stages:

1. **Pressure Test for Leak Detection:** Initially, a pressure test is conducted to check for any leaks in the air conditioning system by pressurizing it with a certain amount of nitrogen and observing whether the pressure remains constant. If there is a pressure drop, leaks need to be located and repaired.
2. **Vacuuming:** After confirming there are no leaks, the next step is to vacuum the system. A vacuum pump is used to remove non-condensable gases and moisture from the system's pipes, ensuring the interior is dry and clean. The vacuuming process typically takes about half an hour until a vacuum degree of -0.1MPa or higher is achieved.
3. **Adding Refrigerant:** Once the system has been vacuumed and the required vacuum level is confirmed, you can start adding refrigerant. The refrigerant should be added through the refrigerant injection port. If there is no reserved refrigerant injection port, it should be added from the high-pressure port. Be sure to expel the air from the injection hose to prevent air from entering the system.
4. **Weighing Charge Method:** The most accurate method of charging is the weighing charge method, which involves weighing the amount of refrigerant added to ensure it complies with the manufacturer's specifications.

   Refrigerant charging specification:

Model	Refrigerant	Charging Weight
HSN-JT20	R290	150g

   Note:The refrigerant charge amount is also indicated on the product nameplate.
5. **System Commissioning:** After adding the refrigerant, the air conditioning system needs to be commissioned to ensure it operates normally.

Please note that these steps should be carried out by professional air conditioning installation or maintenance technicians to ensure safety and effectiveness. Throughout the process, it is strictly forbidden to use oxygen for pressurization, as contact between oxygen and the refrigeration oil in the system may cause an explosion. Also, changes in ambient temperature can affect the pressure of nitrogen, necessitating appropriate pressure correction.

Installation



Disconnect electric power from the appliance before performing any maintenance or repairs,failure to do so could result in death or electrical shock.

Because of potential safety hazards under a certain condition, we strongly recommend against the use of an extension cord. However, if you still elect to use an extension cord, it is absolutely necessary that it will be a related national standard LISTED 3-wire grounding type appliance extension cord having a 3- blade grounding plug and a 3-slot receptacle that will plug into the appliance. The marked rating of the extension cord shall be 220V 15A.

Installation Conditions

1. After the unit is installed, the inclination angle of the installation plane cannot exceed 1 degree, and the installation bracket or platform should be able to bear the weight of the unit.

2. In order to ensure good ventilation performance of the unit and daily maintenance and repair, it is required to leave enough space for machine disassembly and maintenance work.

3. There should be no strong magnetism, steam, or dust around the unit, meantime, ensure that there are no heat sources, corrosion, and combustible gases in the installation area.

4. After the unit is installed, there should be enough heat dissipation space on the condensing side to ensure ventilation.

* The ventilation and heat dissipation of the unit play a vital role in the normal operation and performance guarantee of the unit. When the unit is running in ‘constant temperature’ and ‘automatic’ mode, a large amount of heat will be generated on the condensing side of the unit. In order to dissipate the heat smoothly, the condensing side of the unit needs to be ventilated well, otherwise it will affect the unit’s overall performance and lifespan. If there is no ventilation on the condensing side of the unit, it is necessary to install an exhaust fan for forced ventilation.

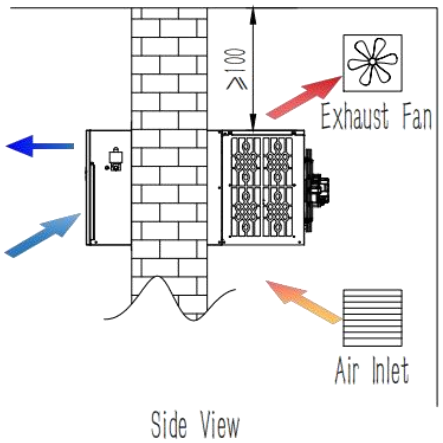

Side View

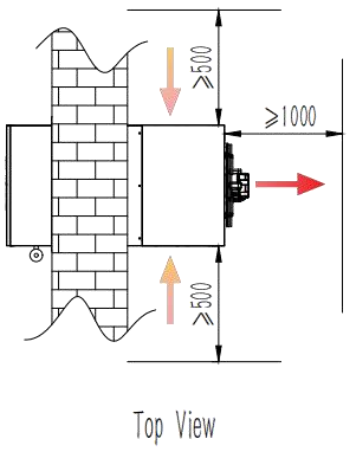

Top View

5. To avoid any air leakage, before install the unit, foam tape needs to be placed in the bottom and side of the unit.

6. Working environment: Temperature 5℃-35℃，Humidity RH<80%

7. Recommend air duct: A- Heat-insulating phenolic board, thickness 15~20mm

B- Stainless steel duct, 20mm insulation

8. When connecting the air duct, supply air flange cover and return air flange are recommended to choose.The connection between the air duct and the unit should be sealed without air leakage.

9. If the unit is installed in a high-temperature and high-humidity environment, it is recommended to paste rubber and plastic insulation cotton with a thickness of more than 10mm on the surface of the unit to avoid condensation on the surface of the unit.

10. If the unit is connected to the air duct to supply air, it must be ensured that the pressure loss of the air duct does not exceed the static pressure outside the unit. (It is recommended that the total length of the air duct should not exceed 6 meters, and the air flow in the air duct should not exceed 3m/s.) If the condensing side of the unit is installed outdoors, an air conditioner rain cover should be installed.



In order to avoid fire or electric shock hazard, please do not expose the equipment to damp environment.

Installation Steps

1. Mounting Tools

Item No.	Item	Photo	Item No.	Item	Photo
1	Level		3	Screwdriver	
2	Hammer		4	Saw	

2. Make sure installation location

Choosing the wall surface where the unit will be installed, and find out the position of the wall studs. The unit installation should avoid the wall studs;

Make sure the installation position of the unit on the wall, and the distance from the top of the unit to the ceiling shall not be less than 100mm.

Mark hole location for the unit,outline a rectangle 412mm(width) by 391mm(height) where the unit will be placed

into the wall.

Next, using a saw cut the hole in the drywall, Be careful not to cut into any electrical lines or plumbing.

3. Insert the mounting flange bracket

Slide the flange mounting bracket into the hole so that the flange is flush with the wall, and fixed it firmly to the wall with screws.

Make sure the mounting bracket flat without tilted, using airtight sealant or caulking seal the flange sides and bottom to the wall as needed.

4. Fixed the mounting flange bracket

Through the 8 fixing holes on the front of the flange bracket, use screws to fix the flange on the wall, make sure that the screws are flush with the flange surface of the bracket, and must not be over-tightened or over-loose.

5. Mounting the unit

Slide the unit in along the mounting flange bracket. Slide the condensing fan side of the device into the bracket until the desired depth is reached, making sure that the humidification solenoid valve and power cord of the device do not touch the flange of the bracket.

6. Seal all cracks and gaps

Seal all cracks and gaps around the unit with an airtight sealant or caulking to prevent air leakage and movement of the unit

7. Attach the condensate drain line

Note: The drain line must be connected well before starting the unit.

There is a condensate drain hole at the bottom of the unit on the condensation side, and the diameter of the condensate drain is DN15

a. It is recommended to connect the water seal at the bottom of the condensate drain pipe, and the other end of the drain pipe should be placed in a bucket or directly connected to the drain pipe;

b. If the other end of the drain pipe is placed in a bucket, the bucket must be emptied in time to avoid water overflowing the bucket or prevent mold from water growing. If the machine runs for a long time, it is recommended to connect the drain pipe to the open floor drain or sink.

c. The drain at the bottom of the unit needs to be connected to a water seal. The size of the water seal is shown in the attached picture (users prepare the water seal by themselves).

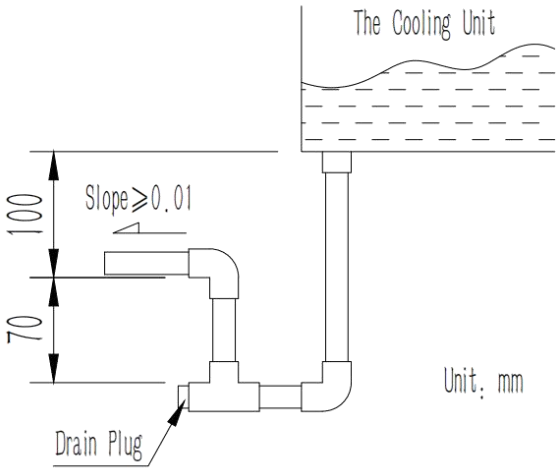

8. Connect the water inlet pipe

Note: The water inlet pipe for humidity must be connected well before starting the unit.

There is a humidification water inlet interface on the right side facing the air outlet of the unit, and the diameter of the humidification water supply pipe is DN08

a. Connect the manual water flow regulating valve to the humidification water inlet pipeline.

b. Purified water is preferred for humidification. If there is no pure water, tap water can also be used. Avoid limescale as much as possible, or it will affect the humidification effect.

c. To better control the wet-film water inlet flow rate, electromagnetic water valve and water flow gauge are suggested to be installed. Otherwise, the water will always be supplied to the machine in a normally open state, which will cause the equipment to leak and fail to operate.

Below suggested water flow rate of Thenow self-contained cooling units for your checking: (Unit: L/M)

Model	HSN-JT20
Inlet Water Rate	0.5

* Normal tap water pressure scope: 0.15MPa ~ 0.35MPa

Note:

Water flow rate MUST remain low as per above values. If the supply water pressure is changed, you MUST readjust the water flow rate to ensure they meet the recommended values. Thenow and its distributors will not be liable for any possible loss caused by water leakage.

Ensure smooth drainage

Common Mounting Methods:

HSN-JT20 I: Through-the-wall

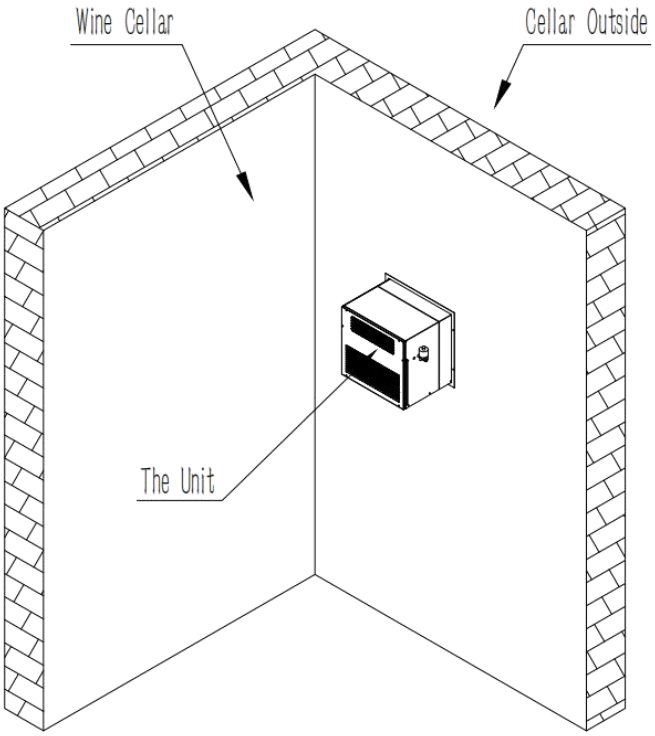

HSN-JT20 II : Duct Work

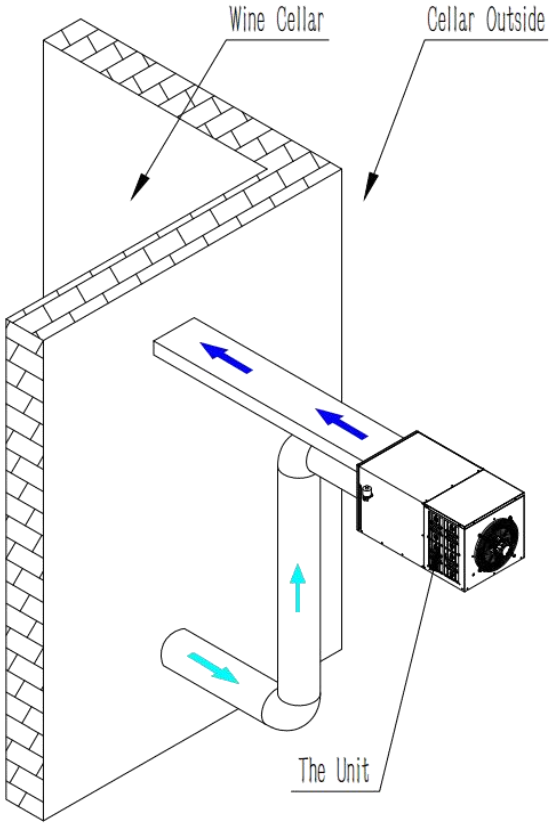

Online Debugging

1. Preparation work before starting the unit

a. Confirm that the power supply of the user distribution box is single-phase 220V, the fluctuation range does not exceed 10%, and the capacity of the distribution box meets the unit use requirements;

b. Refer to the internal electrical schematic diagram of the unit to complete the wiring, and at the same time ensure that the unit is effectively grounded;

c. Before starting up and running, make sure that the unit has been installed correctly, the air supply outlet and the return air inlet have been sealed to ensure no air leakage, no obstruction of condensation air intake, sufficient heat dissipation space, and the controller panel has been installed correctly;

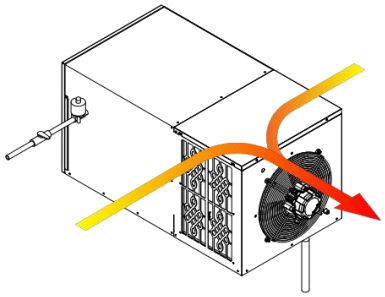

Condenser Airflow Pathways

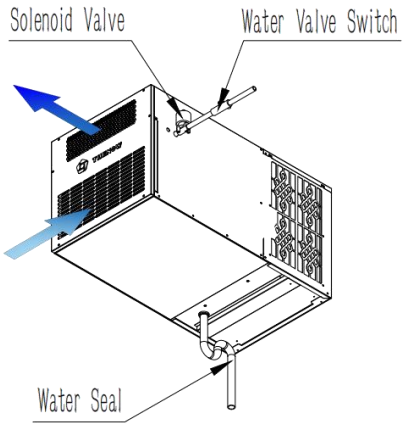

Supply and Return Airflow Pathways

d. Connect well the humidification water pipe, the humidification water supply is smooth, and adjust the manual water valve switch to make the water flow appropriate (customer-provided manual water valve switch);

e. The drain at the bottom of the condensing side is connected to the water seal, and the water seal drain is led to an empty bucket or an open floor drain or sink.

After everything is in good condition, perform the following operations:

1.) Power the machine.

2.) Turn on the unit. Set the unit running mode at ‘Auto’ , input the setting temperature and humidity, refer to controller functions in this manual.

3.) Testing the fan. Factory default is ‘AUTO’ fan operation, under this the fans runs continuously between the two speed when the unit is calling for cooling. Users can also change the fan operation from ‘AUTO’ to ‘Manual’ operation, choosing it running at high speed or low speed freely.

4.) Running the unit. Check unit to confirm the compressor is running, such as the hum of the compressor or cool air leaving the unit. Check for any unusual noise or vibration, such as clanking or rubbing.

After the machine runs for 30 minutes or several hours, up to a day or more:

1. Check the alarm record. If all functions work well, no alarm record will be generated.

2. Check the machine for leaks.

3. Check whether the temperature is lower than that when the machine is started. Generally, the coil temperature is reduced by 5-14℃ as the normal range.

4.If the cooling of the unit can operate normally and there is no water leakage, the debugging work is completed.

Note: After transportation or moved, it needs to be allowed to stand for more than 24 hours before it can be turned on.

Introduction of Controller

Controller Introduction:

CK-4C-86 series controller is a new type of controller to realize intelligent control of constant temperature and humidity for a wine cellar and wine cabinet cooling units,which is widely used in precise temperature control places with small volume.

The controller adopts 4-inch large -screen colorful display technology,timing control,automatic/manual control of air flow speed , automatic operation of the appropriate air flow speed , comfortable energy saving , accurate and reliable.

Functional features:

1. With 4-inch capacitive full-touch display, clear picture and easy to operate.
2. Real-time display of temperature, humidity and clock.
3. Timing control.
4. Fan speed manual/automatic control selection.
5. Multiple operating mode options.
6. Built-in advanced parameter settings,manufacturers can freely set according to different customer needs.
7. Standard 86 mounting bottom case for quick and easy installation.
8. Power off and restart function.
9. Alarm can be remembered.

Technical Specifications

Power Supply	PCB：AC220V±10% 50/60HZ
	Display：DC12V
Shall Material	Flame retardant ABS+PC
Power	<12W
Pich of Installation	60mm
Size	PCB：123mm×85mm
	Display：91mm×90mm
Storage Environment	-10~~70℃ 5%~~95%RH
Working Condition	-10~~70℃ 5%~~95%RH

Product installation:

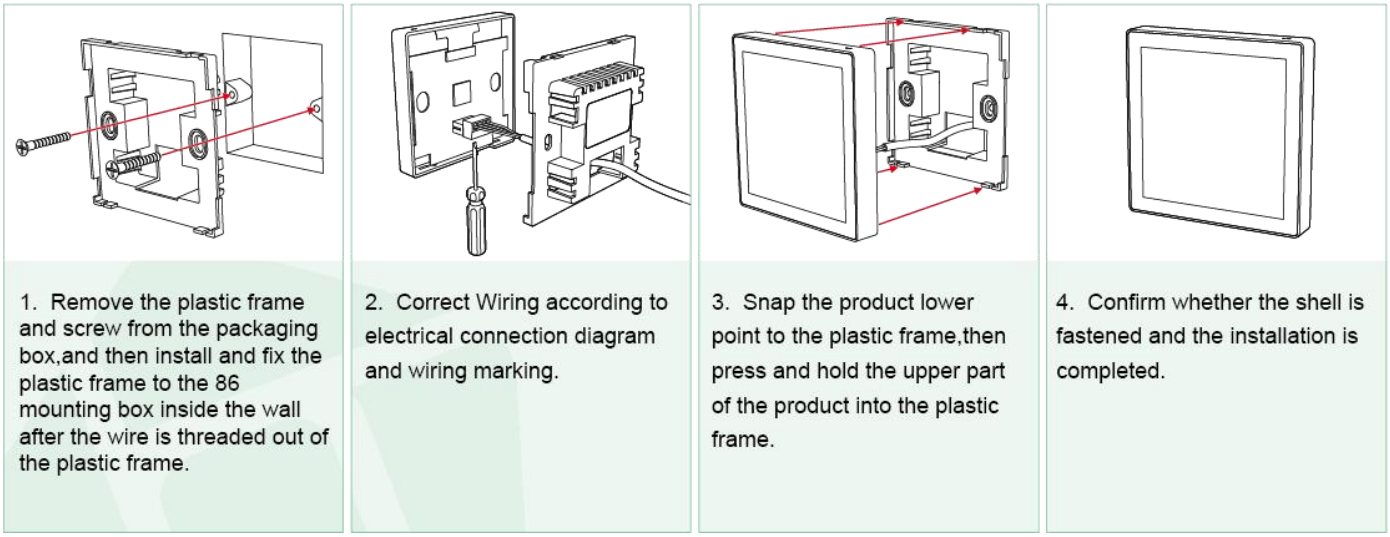

1. Remove the plastic frame and screw from the packaging box,and then install and fix the plastic frame to the 86 mounting box inside the wall after the wire is threaded out of the plastic frame.
2. Correct wiring according to electrical connection diagram and wiring marking.
3. Snap the product lower point to the plastic frame,then press and hold the upper part of the product into the plastic frame.
4. Confirm whether the shell is fastened and the installation is completed.

Functions:

1.Turn ON/OFF the unit
2.Setting
3.Setting temperature
4.Setting humidity
5.Running mode display
6.Coil temperature
7.Running Mode Setting
8.Fan running mode(Manual/Auto)
9.Fan speed
10.Cellar temperature
11.Cellar humidity



Note: Because all Thenow Cooling Units are using same displayer now, for the single cooling unit like JC8, some functions indicating above are not available. Very regretful for the troubles may bringing to you.

Turn system ON/OFF		Touch the switch icon in the lower left corner to turn on or off the unit Color red is on and green is off
Set temperature		1. Touch icon ‘Set' 2. Find 'Temperature' , click to enter and set temperature
Set humidity		1. Touch icon ‘Set' 2. Find 'Humidity' , click to enter and set humidity
Set time		1. Touch icon ‘Set' 2. Find 'Time' , click to enter and set time

Mode		Touch icon 'Mode' to choose the running mode, default value is 'Auto'
Fan Running Mode		Touch icon next to the switch, choosing the running mode of the fan at 'A' or 'M' (A-Auto running speed, M-Selecting running speed manually)
Set the fan speed (Only available at the fan work under “Manual” running mode)		Touch the fan icon to change the fan speed

Maintenance

1、Using Requirements

(1) Working conditions: Surrounding temperature at 5℃-35℃, relative humidity lower than 90% ;

(2) Please make certain power supply is specified voltage, it’s strictly prohibited to operate equipment with phase missing or under voltage ;

(3) If the equipment has not been used for a long time ,please make sure to turn off the power.

2、Cleaning and Replacing

Disconnect electric power from the appliance before any operation, otherwise there will be the risk of electric shock.

1. Because the temperature probe is a sensitive element,in dusty place,please use low pressure water to clean regularly (for example,with the dust ball blowing wash),when the accuracy become poor, please correct or replace;

2. The return air outlet of this product is equipped with a filter to filter the dust in the wine cellar. The air filter

should be cleaned at least once every six months under the running environment of the wine cellar.

The cleaning steps are as follows:

a. Please unplug the power supply without taking out the unit, as shown in the figure below, first remove the air filter cover shown in number 4 in the figure.

b. As shown in No. 3 in the figure below, take out the air filter to be cleaned, clean it and dry it. After cleaning, put back the filter according to the original method;

c. Install the filter cover (number 4) and fix it firmly.

3. This product uses a wet film for humidification, and the wet film pad need to be replaced every 3 years.

The replacement steps are as follows:

a. Please unplug the power supply without taking out the unit, as shown in the figure below, first remove the front cover shown in number 1 in the below figure.

b. As shown in No. 2 in the figure below, take out the humidifying wet film pad to be replaced and put in a new one. Note that the direction and placement of the wet film pad must be the same as the original one without bending and deformation, otherwise it will directly affect the humidification effect..

c. After the replacement work is completed, install and restore the unit front cover (number 1) and fix it firmly.

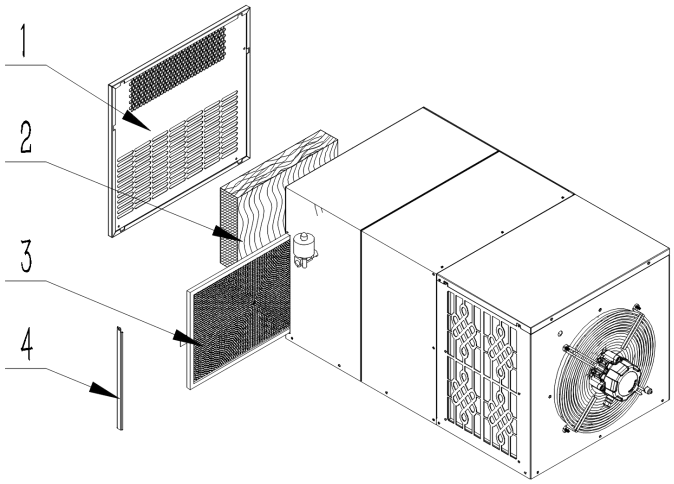

Troubleshooting



Disconnect electric power from the appliance before performing any maintenance or repairs,failure to do so could result in death or electrical shock.

- If maintenance is needed, wait for 3 minutes after power failure (let capacitor discharge on PCB), and then open the maintenance door.
- The surface temperature of the condenser may be very high. Do not touch it to prevent burns.
- Even if the fan and compressor have stopped ,there is still a dangerous voltage at the terminals of the starting capacitor.

Troubleshooting		
Status	Reason	Suggestion
Cooling unit not running	1. No power. 2. Power cord unplugged. 3. Low voltage. 4. Incorrect or loose wirings. 5. Ambient temperature above 35°C or lower 5°C. 6. Setting higher than ambient temperature. 7. Defrosting mode on.	1. Check power at receptacle & fuses. 2. Plug-in power cord plug. 3. Contact an authorized electrician. 4. Check all wirings and connections. 5. Ambient temperature not meet unit working conditions. 6. Lower temperature setting . 7. Wait 5-30minutes.
Cannot dehumidification	1. Inlet or outlet air grille is stuck. 2. Air filter is stuck. 3. Refrigerant leakage. 4. Compressor not working. 5. Fan is not working	1. Please check the air grille and clean it. 2. Check air filter. 3. Add refrigerant. 4. Check whether the compressor is normal. 5. Check the fan.
No air exhaust	1.The air supply is blocked. 2. Fan is not working.	1. Check and clean air outlet. 2. Check the fan.
Louder noise	1. Loose parts. 2. Air filter is stuck. 3. The unit is not installed smoothly.	1. Check parts. 2. Clean filter. 3. Install the machine smoothly.
Temperature too high	1. Setting too high. 2. Improper cabinet seals. 3. Ambient temperature too high. 4. Cabinet/room too large. 5. Fan fault. 6. Refrigerant leakage.	1. Lower setting. 2. Check gasket and door opening. 3. Check installation location. 4. Check for excessive size or the machine model choice is improper. 5. Check both evaporator and condenser fans. 6. Add refrigerant.

Unit running too long or continually	1. The machine model choice is improper or improper room sealing. 2. Ambient temperature to high.	1. Check machine mode or check room tightness. 2. Check installation location or increase setting.
Evaporator icing	1. Evaporator airflow restricted. 2. Unit not stopping due to air leak,high ambient temperature or low setting. 3. Low ambient temperature. 4. Bad thermostat or sensor. 5. Refrigerant leaking. 6. Expansion valve blockage.	1. Check the fan. 2. Check the sealing of the unit, ambient temperature and setting temperature. 3. Defrost the unit 4. Check for thermostat and sensor. 5. Check for sealed system leakage. 6. Check for low side pressure.
The fan keeps running	1. Fan protection procedure. 2. Wrong wiring harness connection.	1. Wait 3 minutes. 2. Check harness links.
No cooling but compressor running	1. Refrigerant leakage. 2. Evaporator airflow restricted.	1. Check of refrigerant. 2. Check for airflow through evaporator.



The above information is for reference only. If the machine fails to work properly, please contact your local dealer or your local authorized repair station.

All electrical installation and maintenance work in this manual must be performed by a professional electrical engineer.,our company is not responsible for opening the panel and electric control cabinet without the permission of the company.

Fault Code Table

Fault Code	Fault	Possible Cause	Solution
E1	Three-phase Alarm	Phase loss in three-phase power	Check if the three-phase power supply is normal
E2	High Voltage Protection	1. Dirty or clogged filter 2. Blocked air vent 3. Fan not working	1. Clean the filter 2. Clear the air vent 3. Inspect the fan
E3	Low Voltage Protection	1. Refrigerant leakage in the piping 2. Fan not working or is dirty/clogged	1. Contact a professional for repairs 2. Inspect the fan
E4	Compressor Overload Protection	1. Excess refrigerant charge 2. Mismatched rated voltage 3. Excessive pressure	1. Check if the refrigerant charge exceeds the rated amount. 2. Check if the line voltage matches the rated voltage. 3. Check for blockages in the compressor's inlet and outlet.
E5	Temperature and Humidity Sensor Fault	1. Sensor wire disconnected 2. Sensor damaged	1. Check the disconnected wiring and plug it back in 2. Replace the sensor

E6	High Temperature Alarm	Temperature exceeds 40 degrees	The machine has entered self-protection mode; it will resume operation when the temperature drops below 40 degrees.
E7	Coil Temperature Sensor Fault	1. Sensor wire disconnected 2. Sensor damaged	1. Check the disconnected wiring and plug it back in 2. Replace the sensor
E8	Water Level Alarm	The drain outlet is blocked, and the water level in the internal drip tray has reached the alarm threshold.	Clear the drain outlet.

Warranty

Limited Warranty

The machine provided by our company is guaranteed for one year and the fan is guaranteed for two years and the compressor for three years from the date of arrival. During the warranty period, any defects due to workmanship or materials, we guarantee to repair or replace the machine free of charge. (warning: the machine due to the use of dust ,corrosive liquid and other non-machine quality reasons for damage is not covered by the warranty.

Commitment in after-sales service

During the warranty period，our company is responsible for the maintenance of the equipment，if the equipment exceeds the warranty period， our company will charge for reasonable maintenance cost.

Other preferential terms

Our company provides free technical advisory services to users.

Thenow Australasia

Unit 10
38 Corporate Blvd
Bayswater Vic 3153

www.thenowair.com.au

Email: info@thenowair.com.au
Tel: 1800 934 015